Manufacturing Technology Centre

Optimisation of a Fork Bottom for AM

Andrew Triantaphyllou

Technology Lead , Design for AM

TCT, 30 Sep 2015

Stand J21

Manufacturing Technology Centre

HVM CATAPULT CENTRES

MTC is the lead centre for Net Shape & Additive Manufacturing in the High Value Manufacturing Catapult

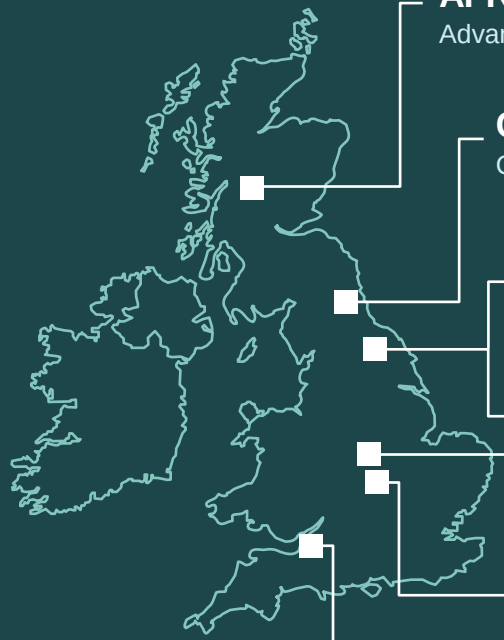

AFRC
Advanced Forming Research Centre

CPI
Centre for Process Innovation

NAMRC
Nuclear Advanced Manufacturing Research Centre

AMRC
Advanced Manufacturing Research Centre

MTC
Manufacturing Technology Centre

WMG
Warwick Manufacturing Group

NCC
The National Composites Centre

mtc Manufacturing Technology Centre

CATAPULT High Value Manufacturing

Overview

What we did

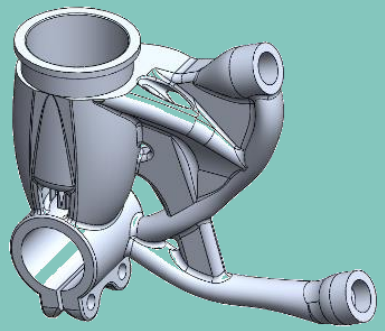

Can an SME use AM?

£ ?

Our role

GOAL: Understand rules for AM optimisation

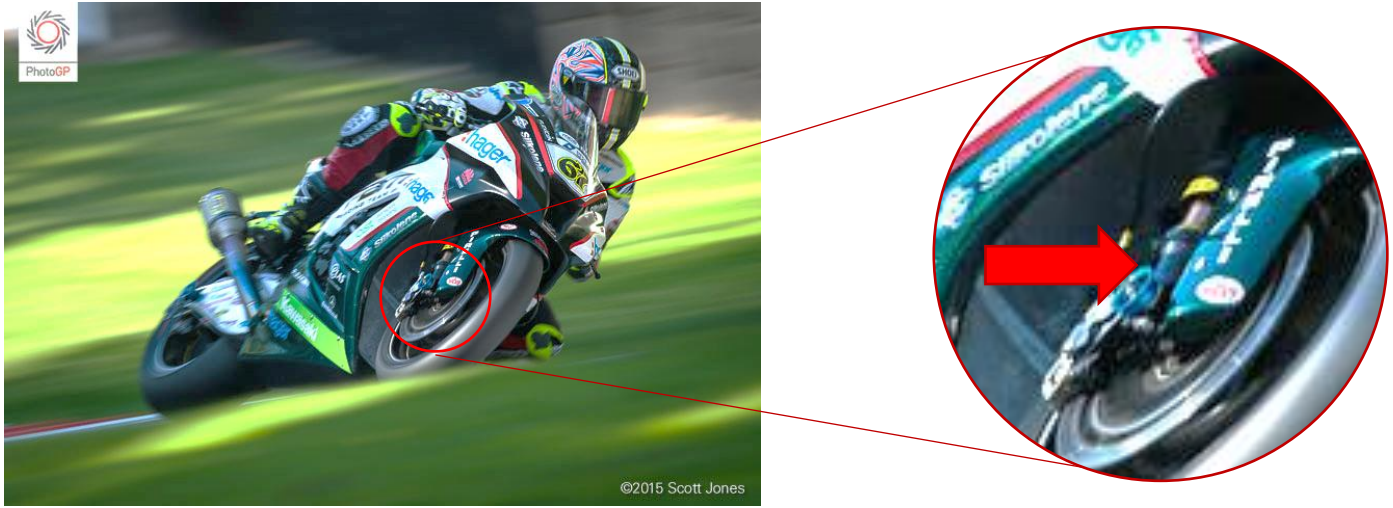

Image: Copyright Scott Jones, via K-Tech

Component: Fork bottom

Modelled by K-Tech using SolidWorks

BEFORE

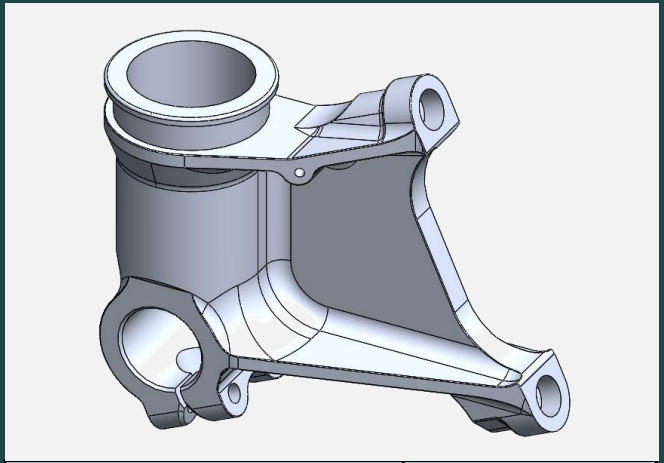

Material	6082-T6
Mass	570g

AFTER

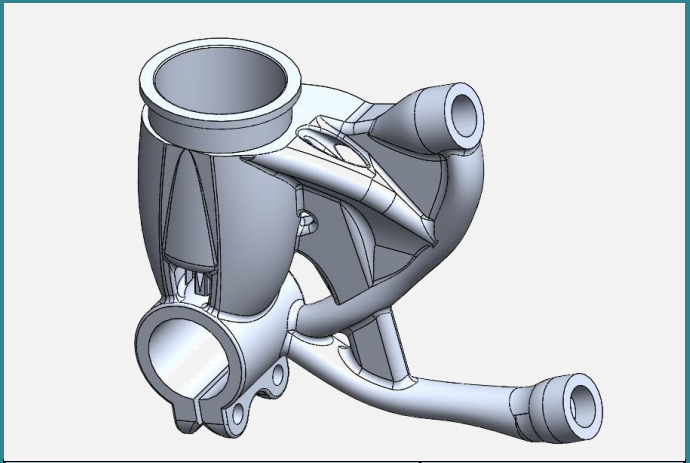

Material	AlSi10Mg
Mass	419g
Saving (both forks)	-302g

mtc
Manufacturing Technology Centre

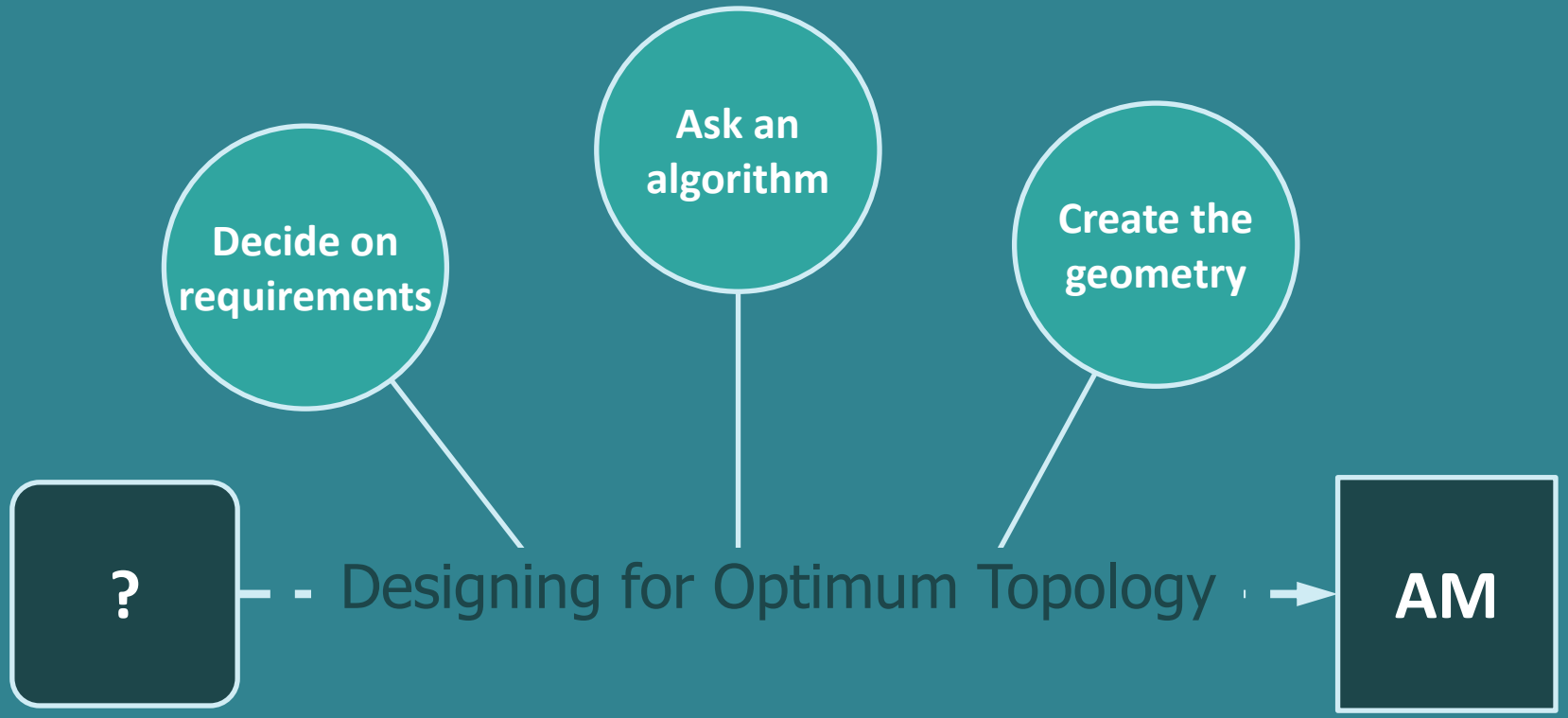

mtc
Manufacturing Technology Centre

3g braking into a pothole

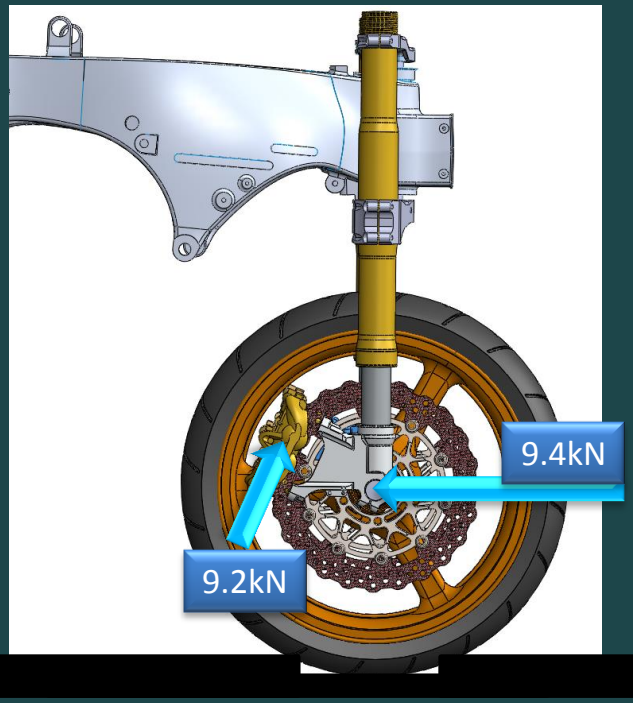

Design volume

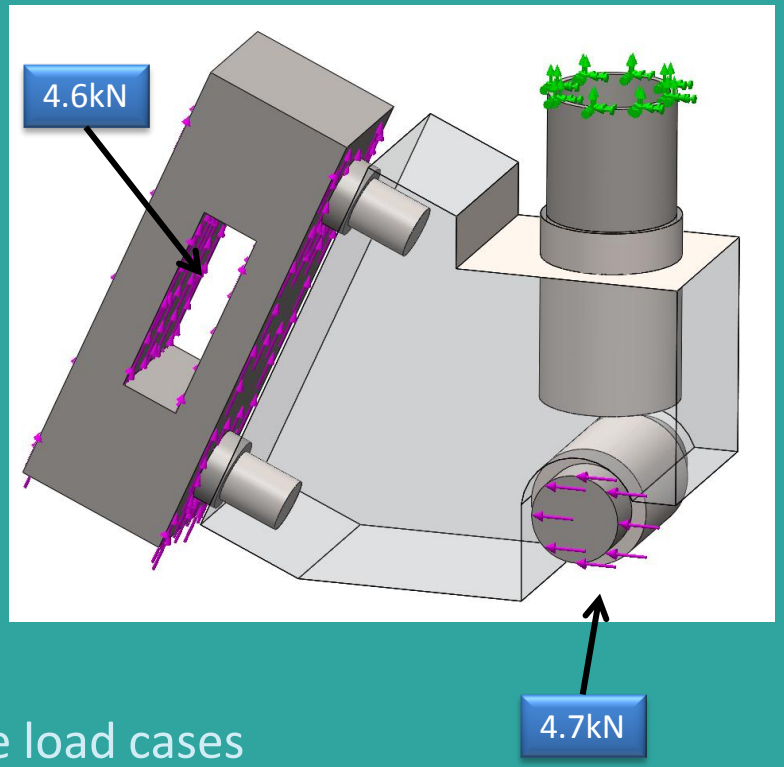

Repeated for alternative load cases

mtc
Manufacturing Technology Centre

The algorithm suggests a solution

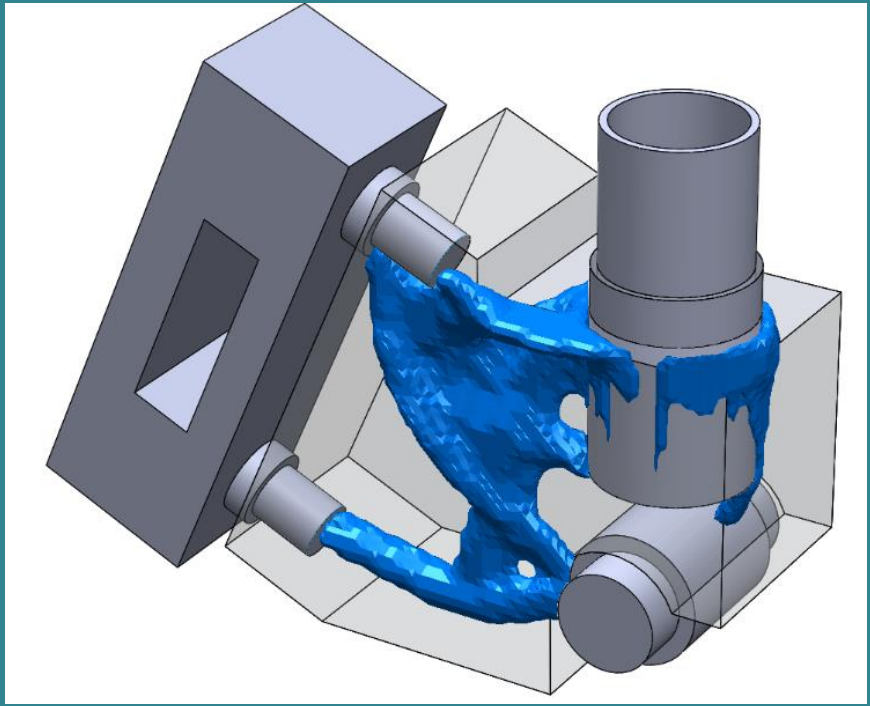

Generated in SolidWorks Premium with GRM TruForm SW Add-in

Selective Laser Melting material choices

Al

Ni

Ti

Fe

Misc

AlSi12

AlSi10Mg

325 MPa	
220 MPa	
~ 9%	

6082-T6

UTS	310 MPa
Yield Strength	265 MPa
Ductility	~ 8%

mtc Manufacturing Technology Centre

Remodelling

1 2 3

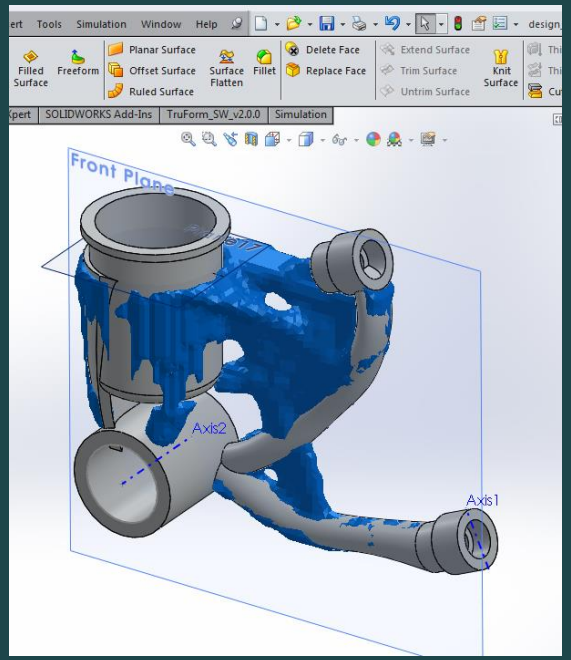

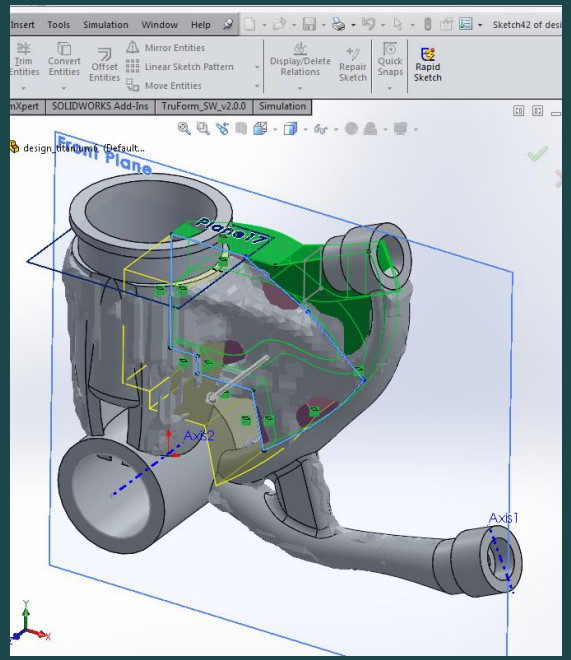

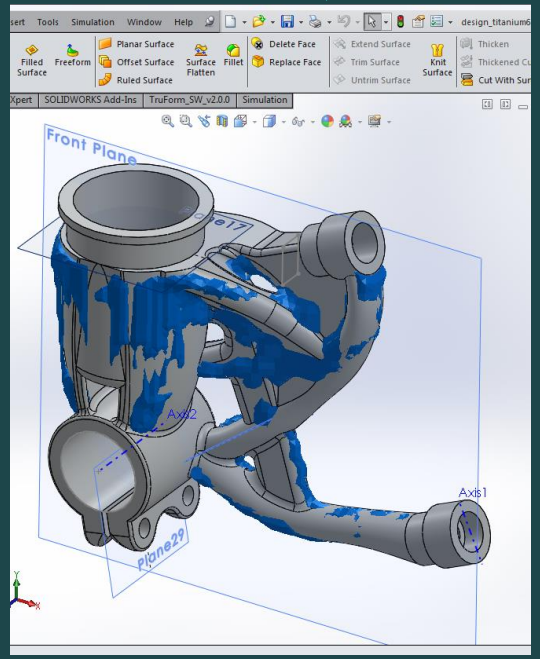

Modelled by GRM using SolidWorks

Remodelling for supports

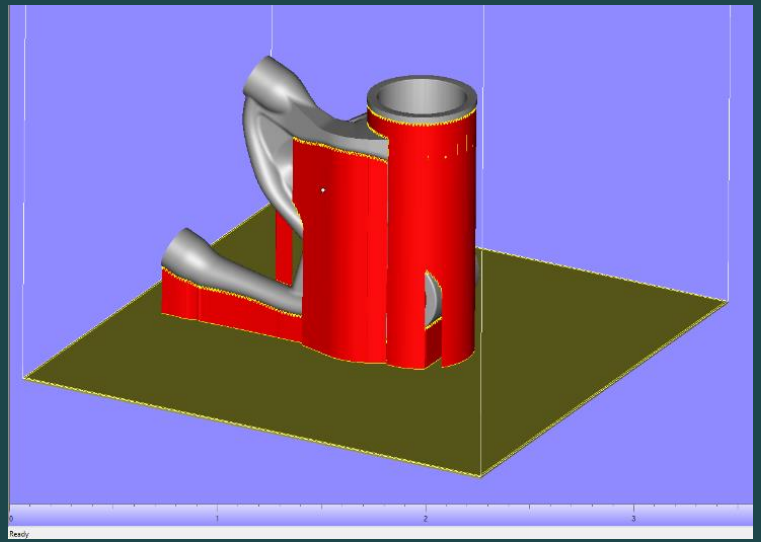

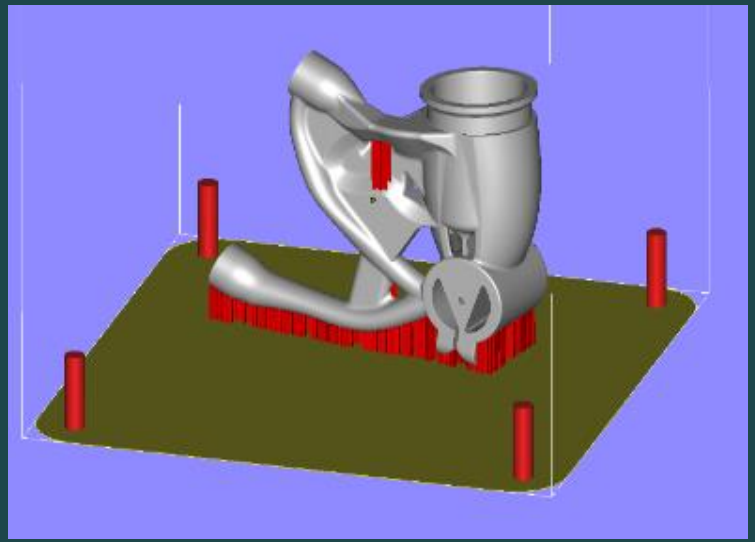

- Modelled for function
- Optimised for supports

Supports added using Magics

Combat fatigue

Allow for improving surface texture by:

- Machining interior (green area)
- Grit blasting exterior (grey area)

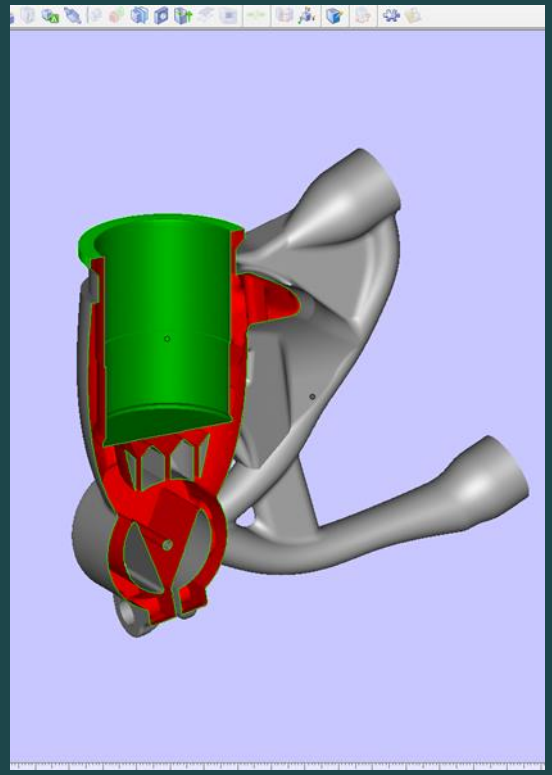

Validation and comparison - Stress

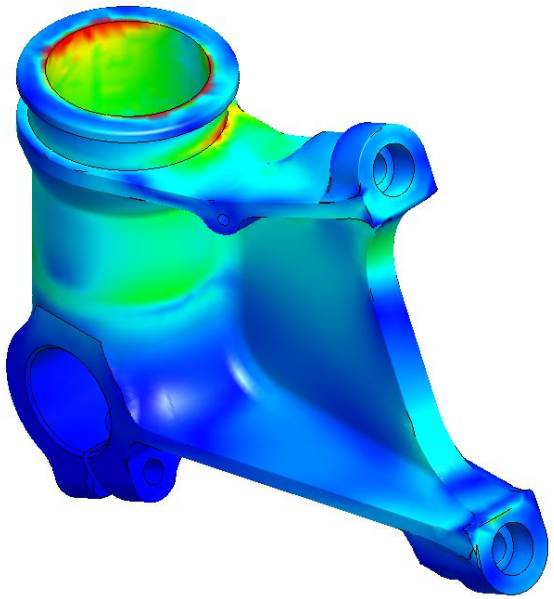

Baseline, FOS = 1.02

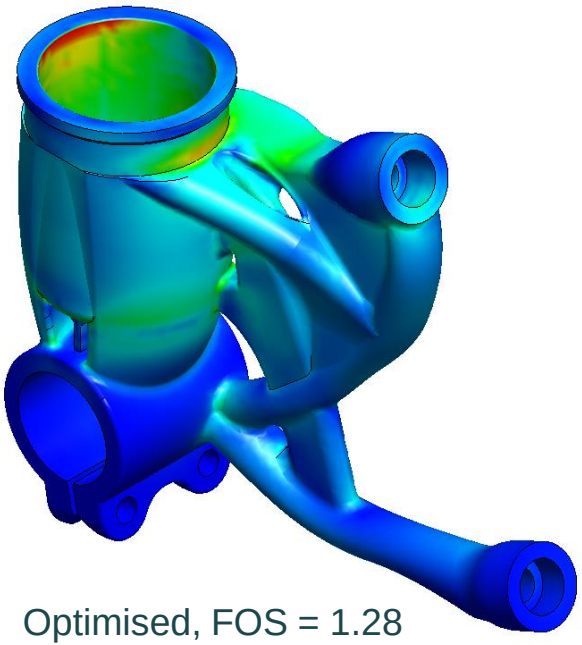

Optimised, FOS = 1.28

Simulation by GRM using SolidWorks Premium

Validation and comparison – Displacement

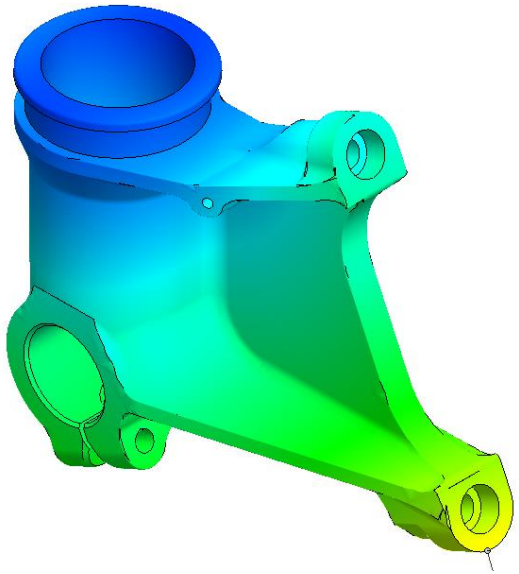

Baseline, Max = 2.2mm

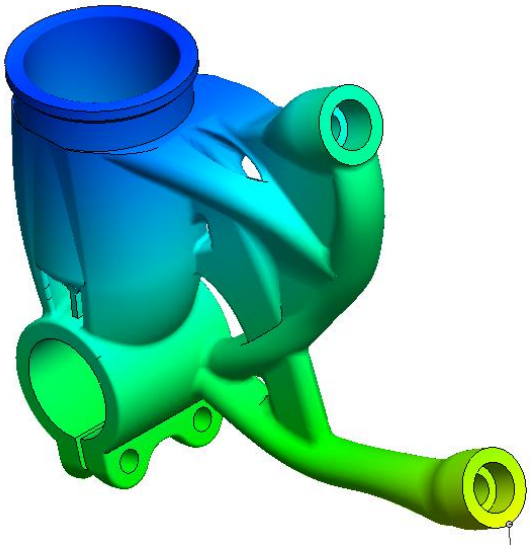

Optimised, Max = 2.2mm

Simulation by GRM using SolidWorks Premium

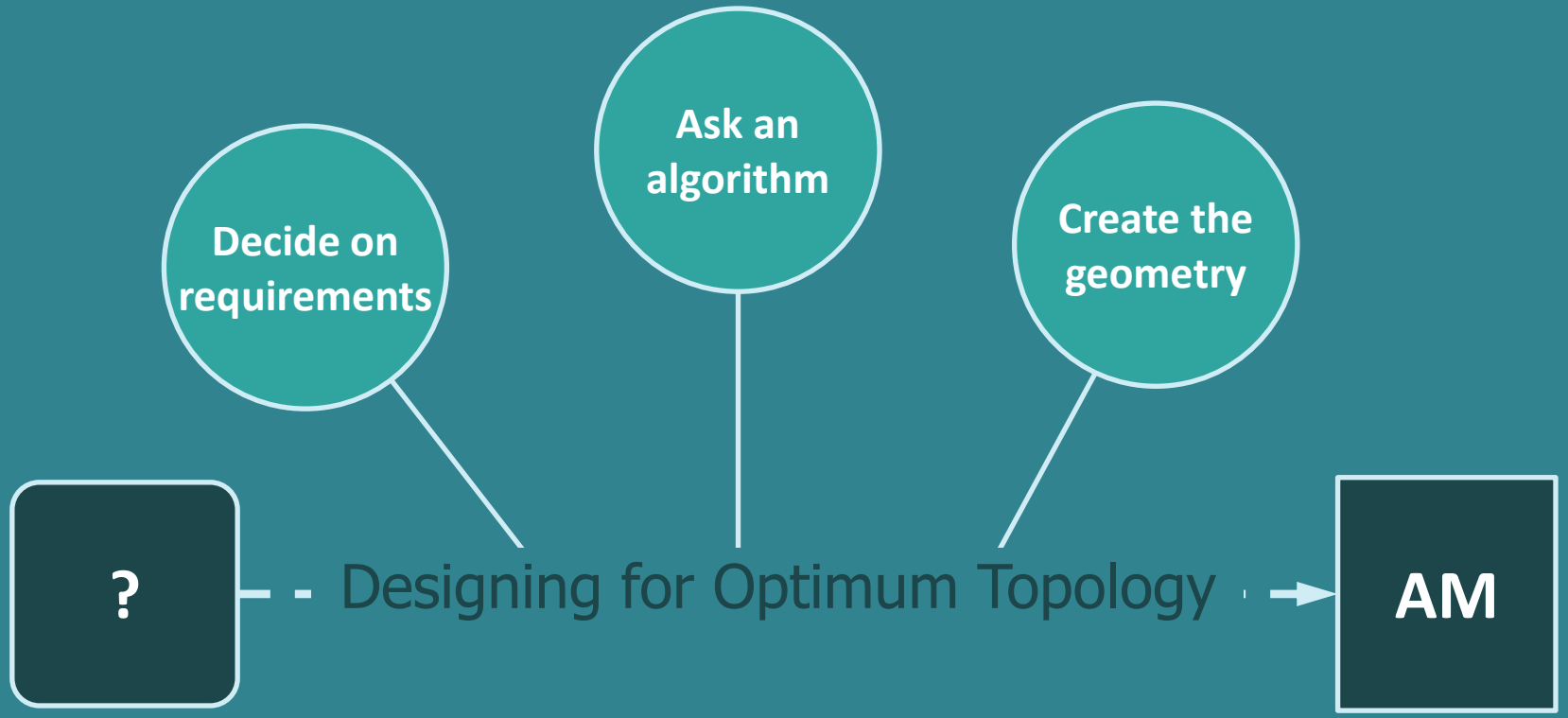

mtc
Manufacturing Technology Centre

What will it cost for AM build?

Batch of 4

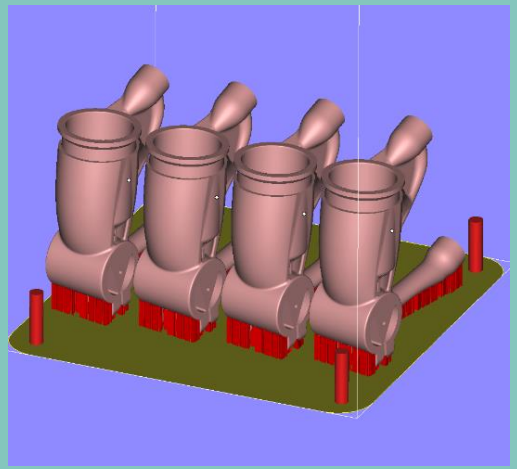

Cost for build

Pre-process files	5 hrs
Operator for build	5 hrs
Build (depreciation)	65 hrs
Powder	@£80/kg
Post-process	£ 230
Per component	*~£1,200*

~£2·5K /Kg

mtc Manufacturing Technology Centre

Cost Factors

Machine utilisation is the main factor

- Model prep
- Operator
- Machine
- Powder
- Residual stress HT
- EDM (removal)
- Fettle
- Blast

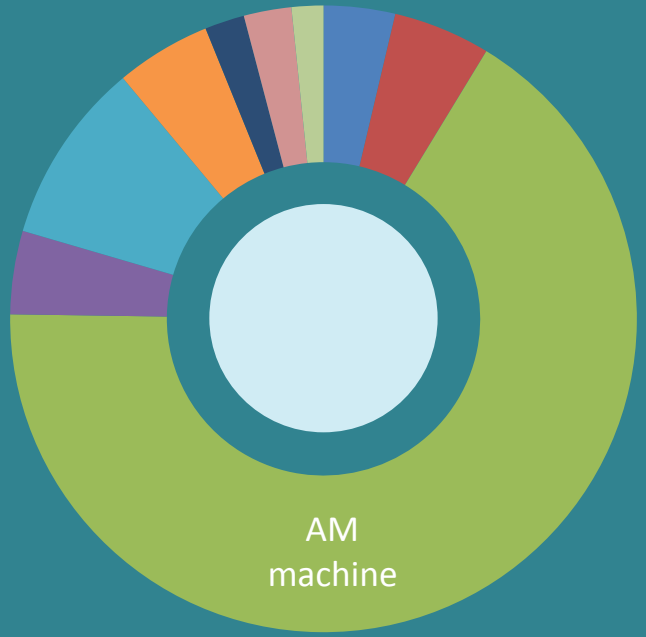

mtc
Manufacturing
Technology Centre

Conclusion

- Too expensive for mass production
- How about for race use?
- Race spec alloy is 7075-T6
- AlSi10Mg can’t match those properties

Future Work

- Investigate whether SLM Ti can provide a better solution than machined Al.

Image: Courtesy of Jon Jessop photography, via K-Tech

mtc
Manufacturing
Technology Centre

How can an SME start taking advantage of AM topology optimisation?

What do you need to Design for AM?

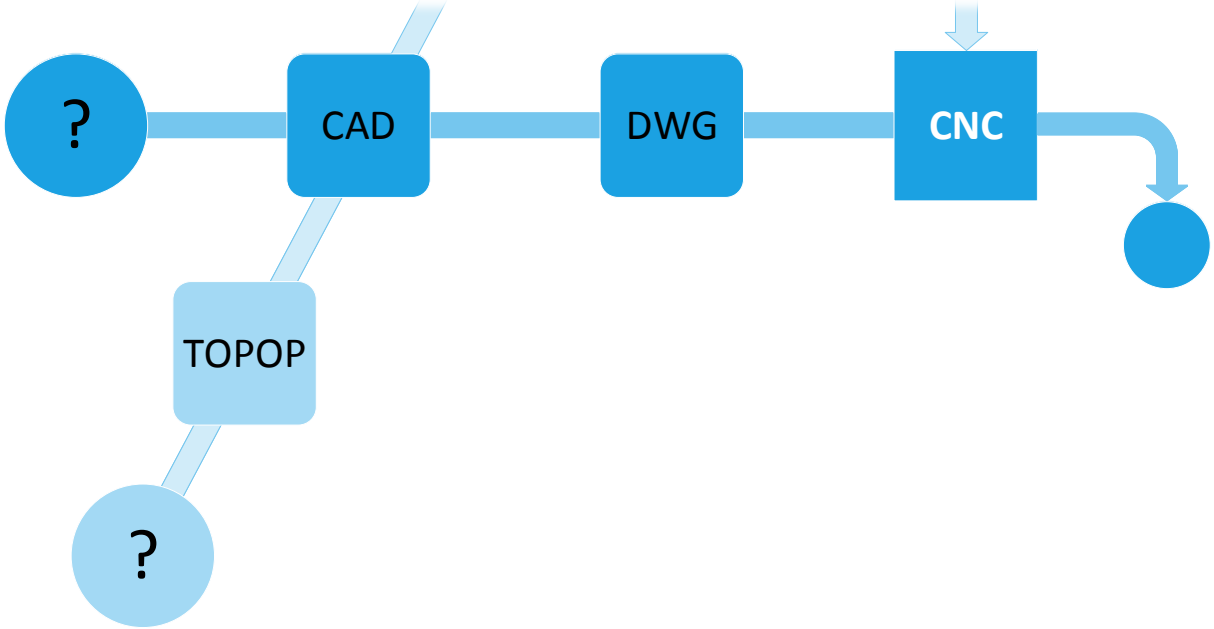

Software investment

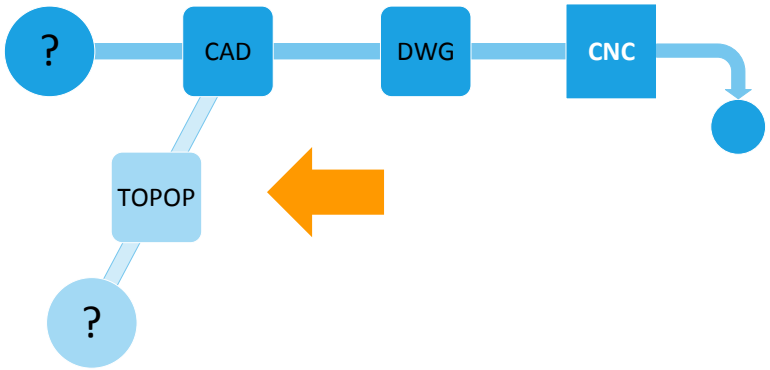

Option 1 – High-end, Powerful

Eg:
- Altair Optistruct
- VR&D Genesis
- Simulia TOSCA

Option 2 – Lightweight, Simpler

Eg:
- Altair INSPIRE

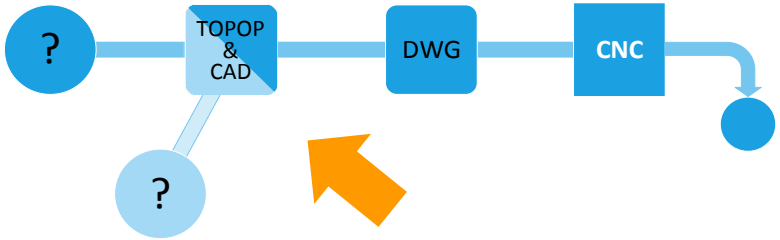

Option 3 – Integrated into CAD

Eg:
- GRM TruForm (SolidWorks)
- Limitstate Form (SpaceClaim)

How the project fits MTC strategy

Design for AM

- User guides – DfAM
- Software comparison and advice
- Software tool improvement
- AM value proposition

Project partners

- SME - Design and Manufacture motorcycle suspension units

- SME - Design Consultants
- Write optimisation tools

- Project to support West Midland SMEs in modelling and simulation

Summary:

- The bar is still high in terms of process cost (what is -302g worth?)
- The bar is lower for access to designing complex forms - one of AM's value adds.
- The MTC works with SMEs to remove barriers to adoption of AM.

Shopping list:

- *Software*
- *Training*
- *AM Bureau Gift Voucher*

mtc
Manufacturing Technology Centre

Thank-you

We would like to thank CASIM for part-funding this project.

EUROPEAN UNION
Investing in Your Future
European Regional Development Fund 2007-13

CASiM 2
CENTRE FOR ADVANCED SIMULATION & MODELLING

DISCLAIMER:
The data contained in this document contains proprietary information and it may not be copied or communicated to a third party or used for any other purpose than that which it was supplied without the MTC's prior written consent. © MTC

For more information please contact:
Andrew.Triantaphyllou@the-mtc.org
Manufacturing Technology Centre
Pilot Way
Ansty Business Park
Coventry
CV7 9JU
www.the-mtc.org

mtc Manufacturing Technology Centre

CATAPULT High Value Manufacturing