ROBOTBIKECO

GRM OPTIMISED ENGINEERING DESIGN

Using Simulation led Design in the Development of Engineered, Bespoke, High Performance Mountain Bikes

ROBOTBIKECO

GRM OPTIMISED ENGINEERING DESIGN

RBC – who?

ROBOTBIKECO

GRM OPTIMISED ENGINEERING DESIGN

RBC CEO, Founder

- Frame builder
- World Cup down hill team mechanic
- Technical Editor at Dirt Magazine

- Rider

ROBOTBIKECO

GRM OPTIMISED ENGINEERING DESIGN

RBC Director, Founder and lead AM designer

- Renault F1, Advanced Digital Manufacturing Engineer
- Airbus, Lead Engineer AM Group

- Rider

ROBOTBIKECO

GRM OPTIMISED ENGINEERING DESIGN

RBC Chairman, Founder and lead composite designer

- Chartered Engineer and PhD in composite design
- Airbus, Group Innovations Snr Research Engineer
- Hieta, Technical Lead

- Rider

ROBOTBIKECO

GRM OPTIMISED ENGINEERING DESIGN

RBC Founder and mechanical design engineer

- Peco, Design Director
- Inspiration for company name!

- Rider

ROBOTBIKECO

GRM OPTIMISED ENGINEERING DESIGN

RBC Partner and lead suspension designer

- Inventor of DW-Link suspension system
- Inventor of Split Pivot suspension system
- Inventor of Delta System suspension system
- Inventor of DW-6 suspension system

- Rider

ROBOTBIKECO

GRM OPTIMISED ENGINEERING DESIGN

RBC Designer

- Dyson, NPD Design Engineer
- Design Consultant, medical and scientific devices
- Zodiac Aerospace, Principal Designer Advanced Concepts

- Rider

ROBOTBIKECO

GRM OPTIMISED ENGINEERING DESIGN

RBC – why?

Does the world really need another mountain bike company?

ROBOTBIKECO

GRM OPTIMISED ENGINEERING DESIGN

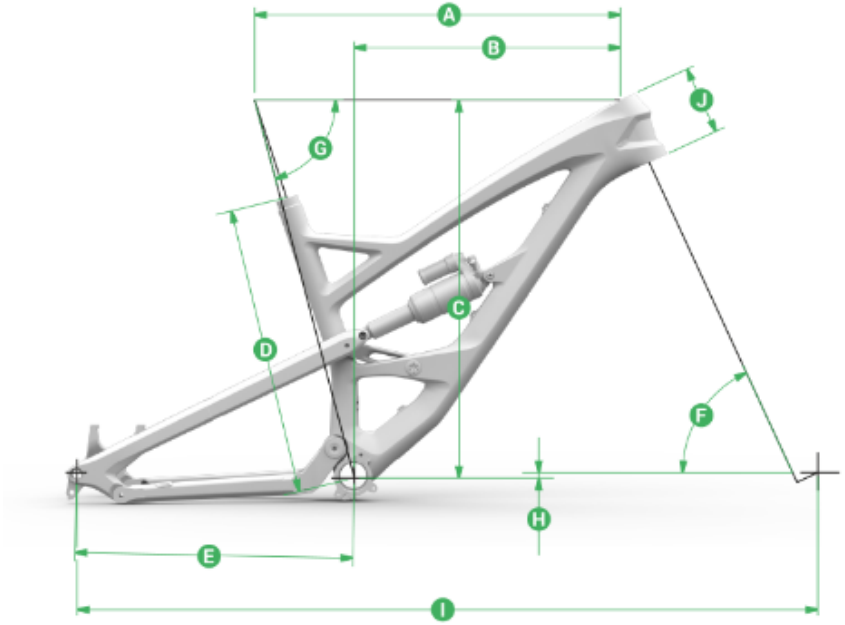

Sizes		S	M	L
A	Toptube length	556,7 mm	581,1 mm	606,5 mm
B	Reach	400 mm	422 mm	445 mm
C	Stack	583,6 mm	592,7 mm	601,7 mm
D	Seattube length	398 mm	448 mm	478 mm
E	Chainstay length	430 mm	430 mm	430 mm
F	Headtube angle	65,2 °	65,2 °	65,2 °
G	Seattube angle (eff.)	75 °	75 °	75 °
H	BB Drop	6,3 mm	6,3 mm	6,3 mm
I	Wheelbase	1143,2 mm	1169 mm	1196,6 mm
J	Headtube length	98 mm	108 mm	118 mm
K	Standover height	747,3 mm	745,5 mm	751,5 mm

ROBOTBIKECO

GRM OPTIMISED ENGINEERING DESIGN

ROBOTBIKECO

GRM OPTIMISED ENGINEERING DESIGN

Problem statement:

“the most expensive bikes give the poorest rider fit”

ROBOTBIKECO

GRM OPTIMISED ENGINEERING DESIGN

RBC – what?

So what is the Robot Bike?

ROBOTBIKECO

GRM OPTIMISED ENGINEERING DESIGN

RBC – what?

The challenge:

- To make the best mountain bike in the world
- A construction system that enables us to manufacture infinitely variable frame geometries
- A construction system that is optimised for weight and strength so that it is at least as good as current best in class
- A construction system that is competitively priced with mass production products
- All of the above achieved through pure function driven engineering principles, in line with the RBC values

ROBOTBIKECO

GRM OPTIMISED ENGINEERING DESIGN

Custom mountain bike frames for ultimate rider fit

Custom frame geometry for individual riding style

Titanium Additive Manufactured lugs

Carbon tubing

Double lap shear joint bonds

- Weight and strength optimisation through topology optimised AM lugs

R130:

- Enduro mountain bike - 130 mm suspension travel

ROBOTBIKECO

GRM OPTIMISED ENGINEERING DESIGN

R130:

- Light and efficient in climbs

R130:

- Fast and stable in descents

RBC - how?

The technology that makes the Robot Bike possible?

RENISHAW
apply innovation™

HiETA
technologies

GRM
OPTIMISED
ENGINEERING
DESIGN

ROBOTBIKECO

GRM
OPTIMISED
ENGINEERING
DESIGN

Topology Optimisation and FEA validation

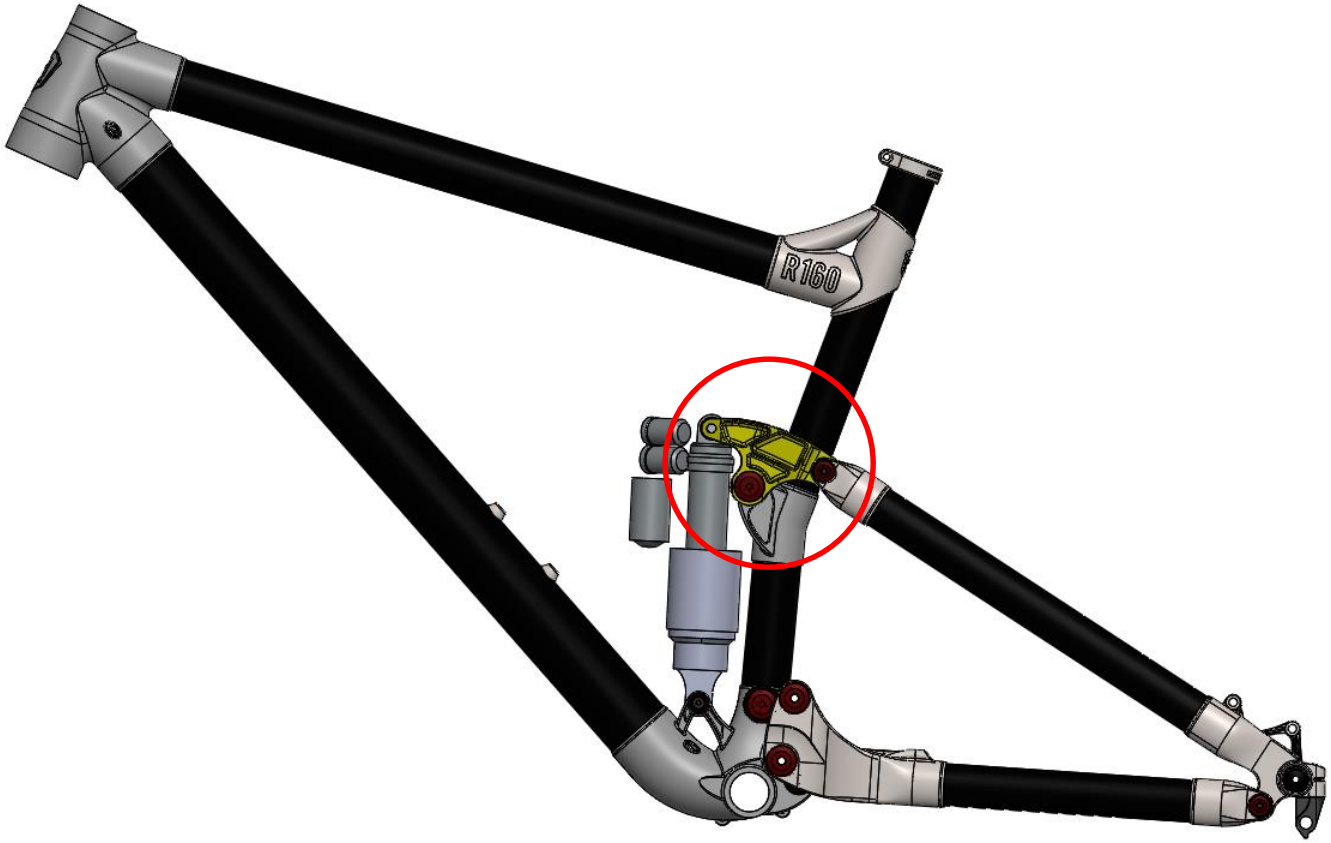

ROBOTBIKECO

GRM OPTIMISED ENGINEERING DESIGN

Topology Optimisation and FEA validation

Original Design:

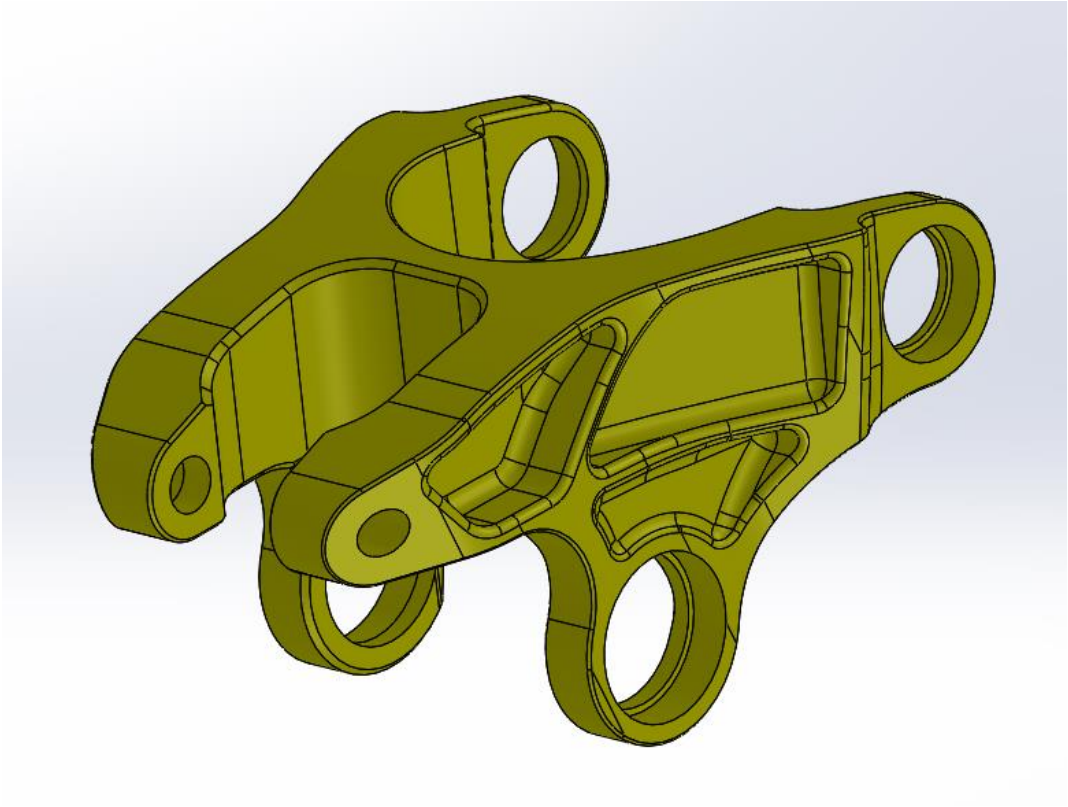

- Weight – 193 grams

ROBOTBIKECO

GRM OPTIMISED ENGINEERING DESIGN

Topology Optimisation and FEA validation

Original Design: **Load case 1**

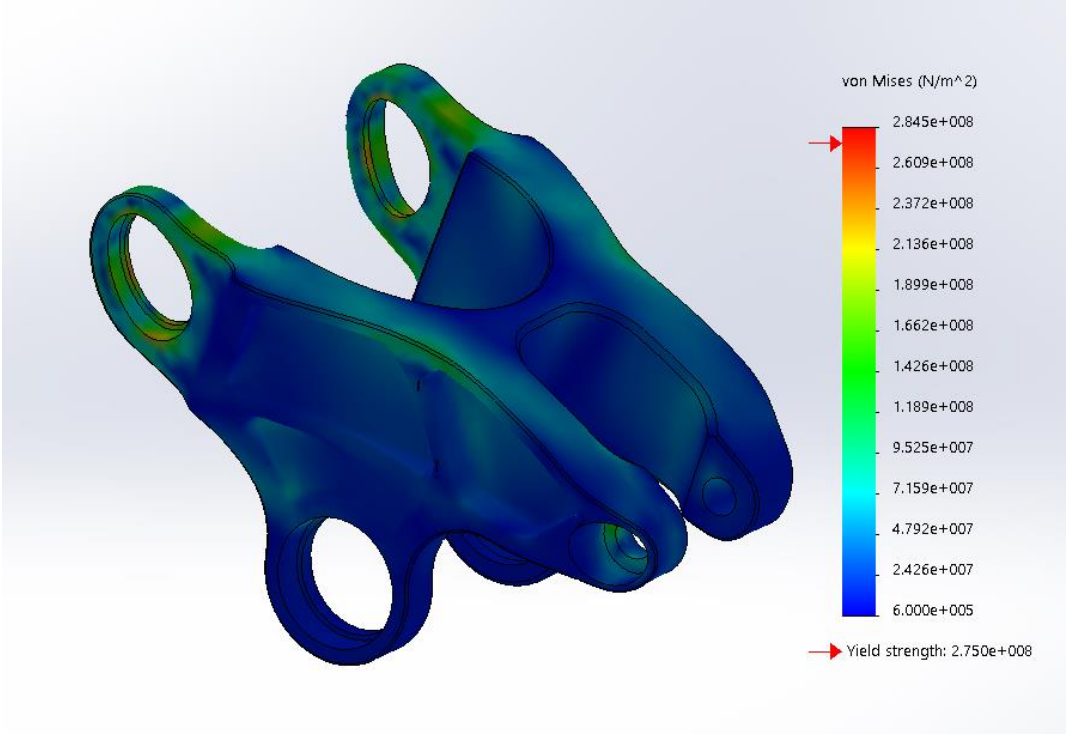

- Peak stress = 285 Mpa
- FOS = 0.96
- Stress map shows extensive low stress areas

ROBOTBIKECO

GRM OPTIMISED ENGINEERING DESIGN

Topology Optimisation and FEA validation

Original Design: **Load case 4**

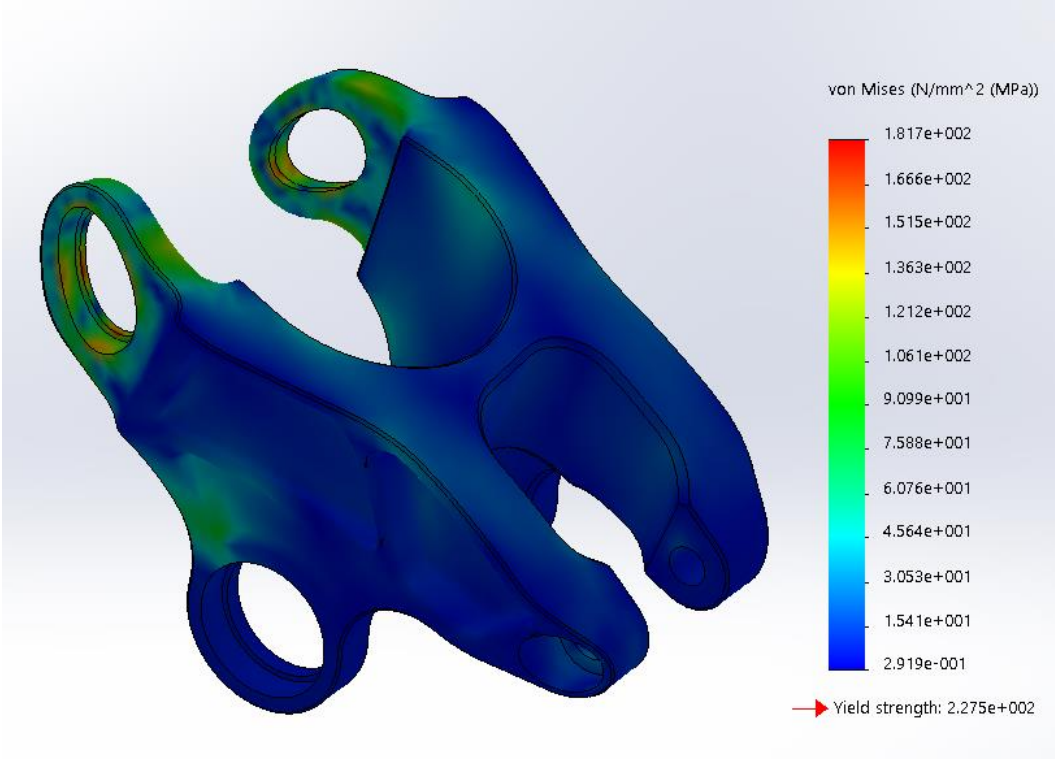

- Peak stress = 182 Mpa
- Stress map shows extensive low stress areas

ROBOTBIKECO

GRM OPTIMISED ENGINEERING DESIGN

Topology Optimisation and FEA validation

Design space definition

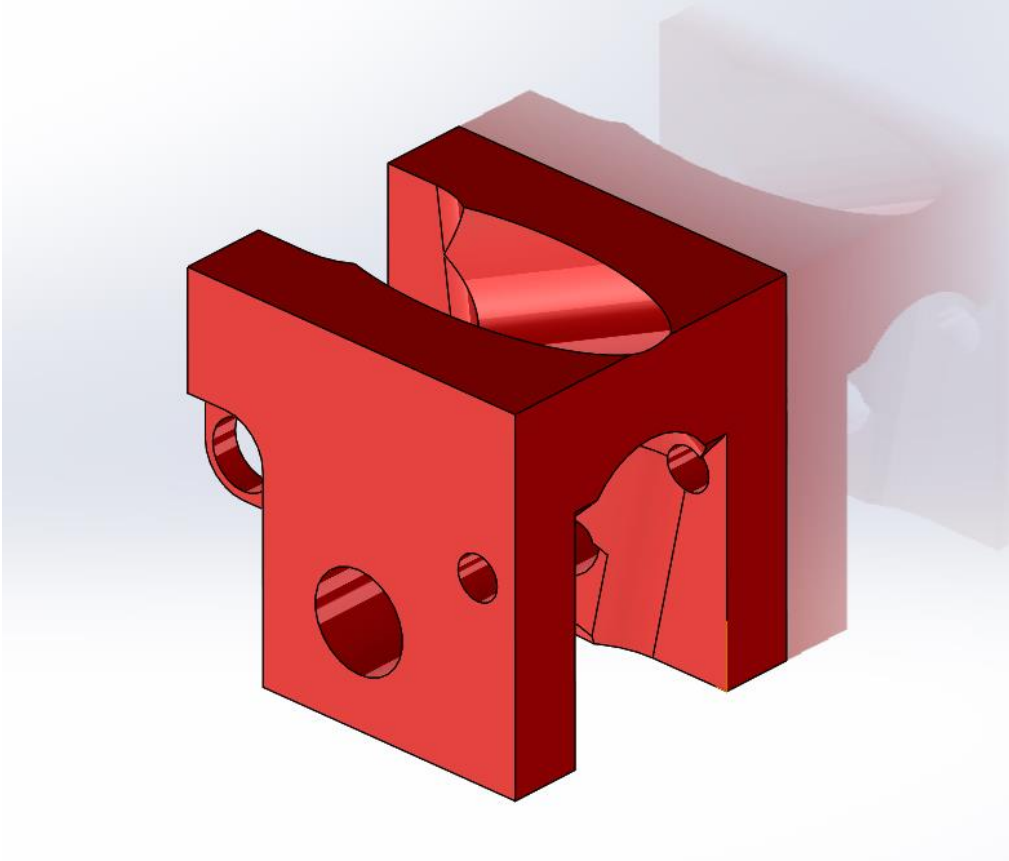

- Bearing and shock mountings
- Clearance to Top Tube, Seat tube and shock absorber

ROBOTBIKECO

GRM OPTIMISED ENGINEERING DESIGN

Topology Optimisation and FEA validation

TruForm SW optimised topology for Load case 1

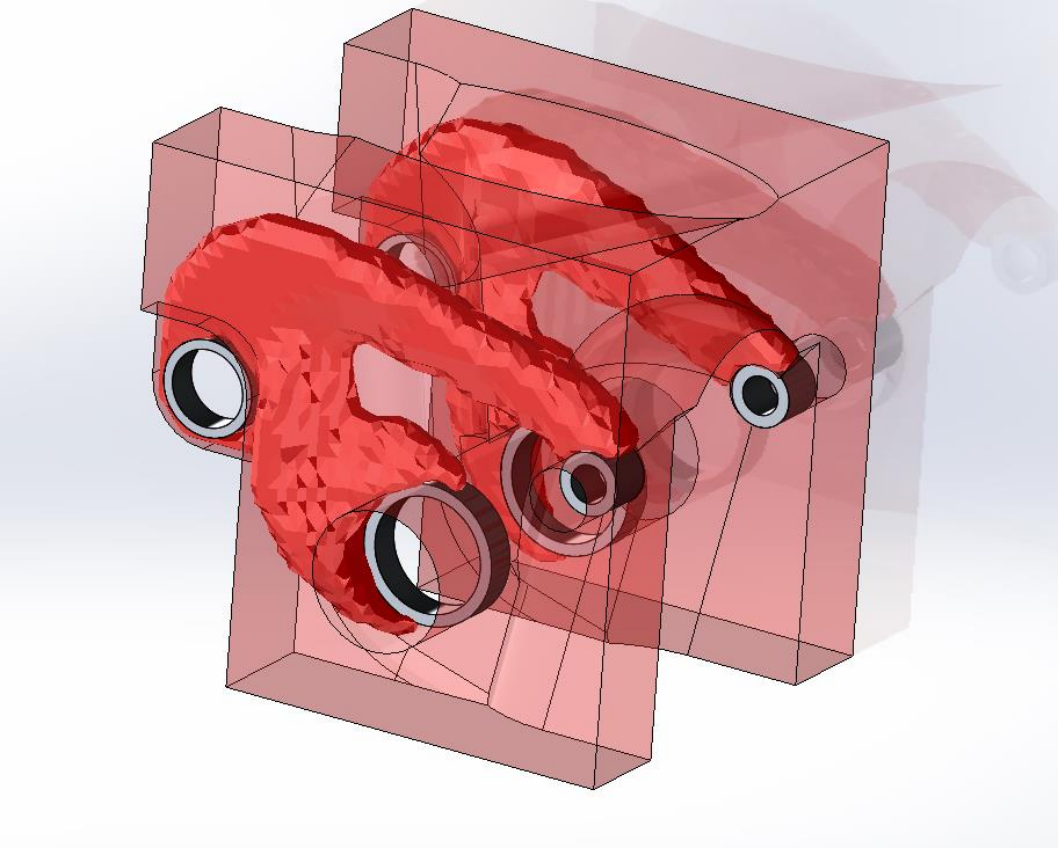

- Optimisation run at various weight targets
- Load case 1 run in isolation
- Wanted to identify key geometry that contributed to part integrity under load case 1

ROBOTBIKECO

GRM OPTIMISED ENGINEERING DESIGN

Topology Optimisation and FEA validation

TruForm SW optimised topology for Load case 4

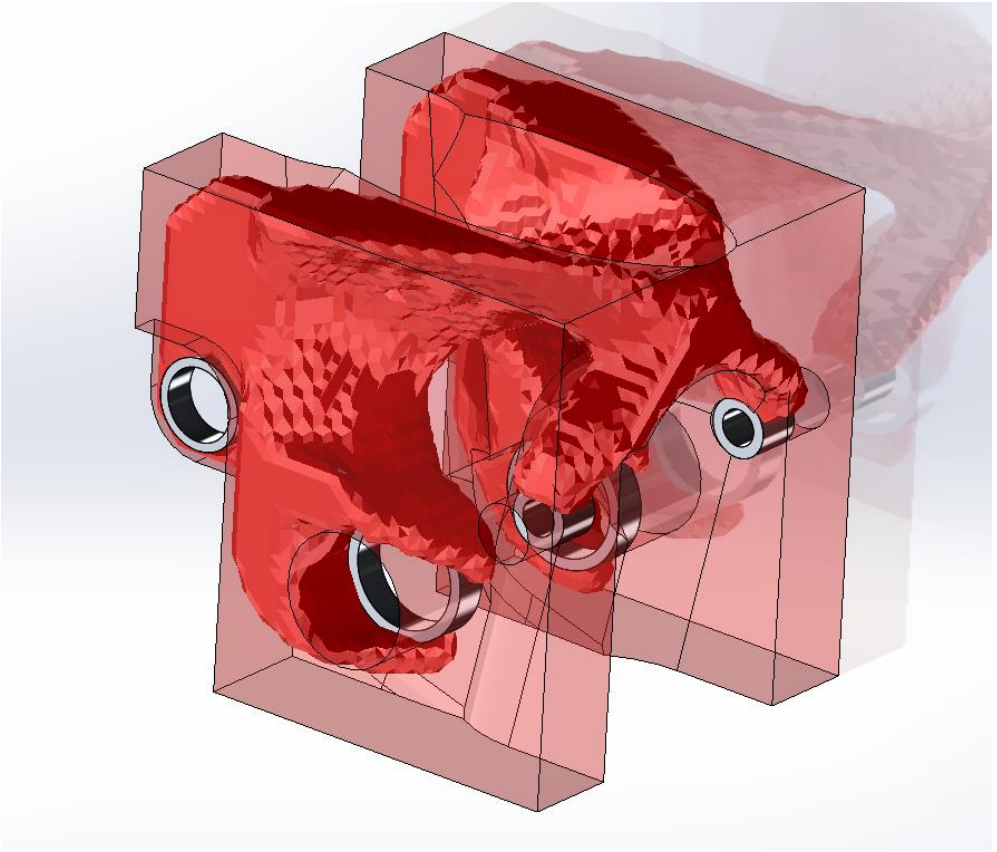

- Optimisation run at various weight targets
- Load case 4 run in isolation
- Wanted to identify key geometry that contributed to lateral stiffness

ROBOTBIKECO

GRM OPTIMISED ENGINEERING DESIGN

Topology Optimisation and FEA validation

Design interpretation

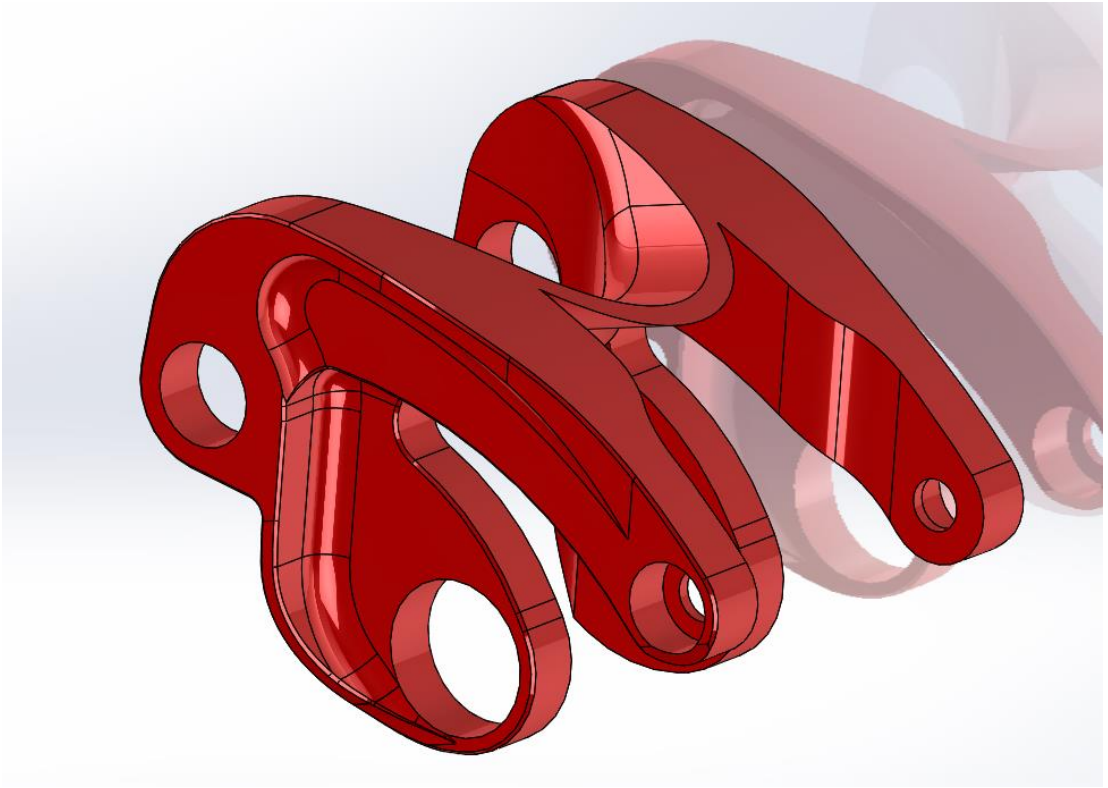

- Engineering perspective: highly successful part design
- Industrial design perspective: not acceptable

ROBOTBIKECO

GRM OPTIMISED ENGINEERING DESIGN

Topology Optimisation and FEA validation

Phase 2 design space definition

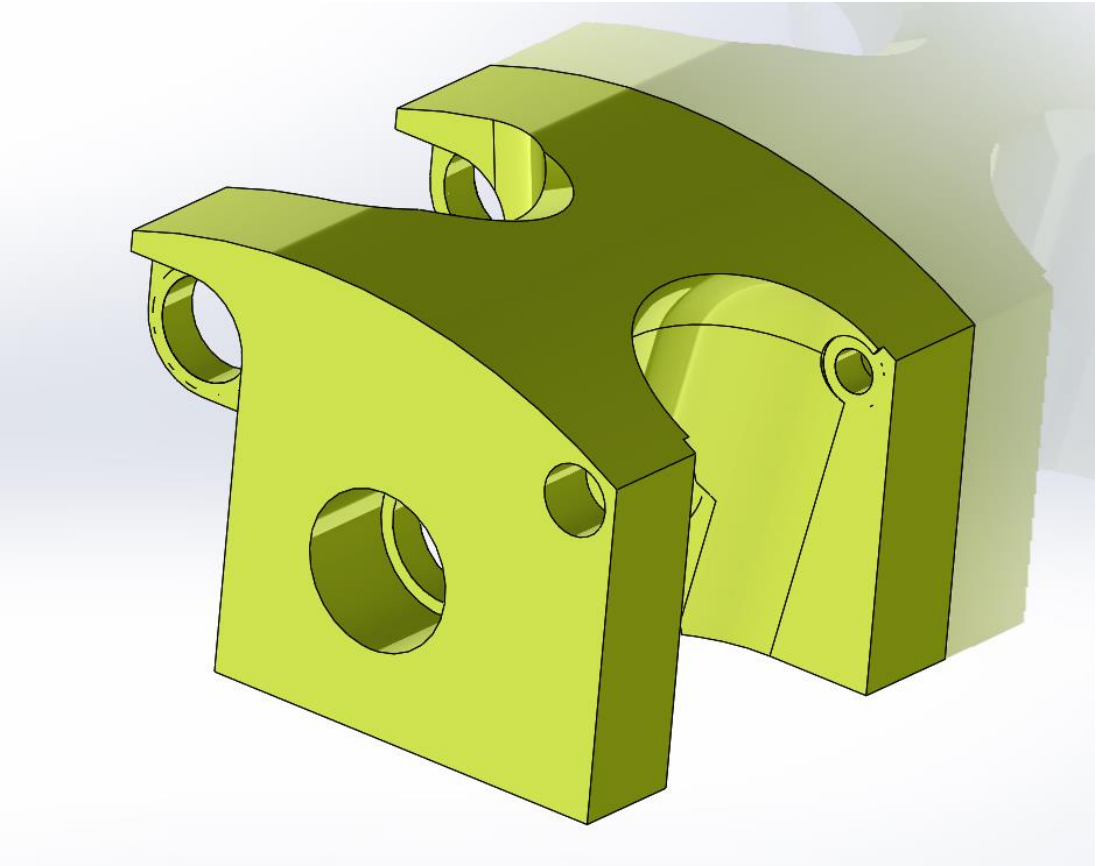

- Upper edge identified as key characteristic

ROBOTBIKECO

GRM OPTIMISED ENGINEERING DESIGN

Topology Optimisation and FEA validation

Phase 2 TruForm SW optimised topology for Load case 1

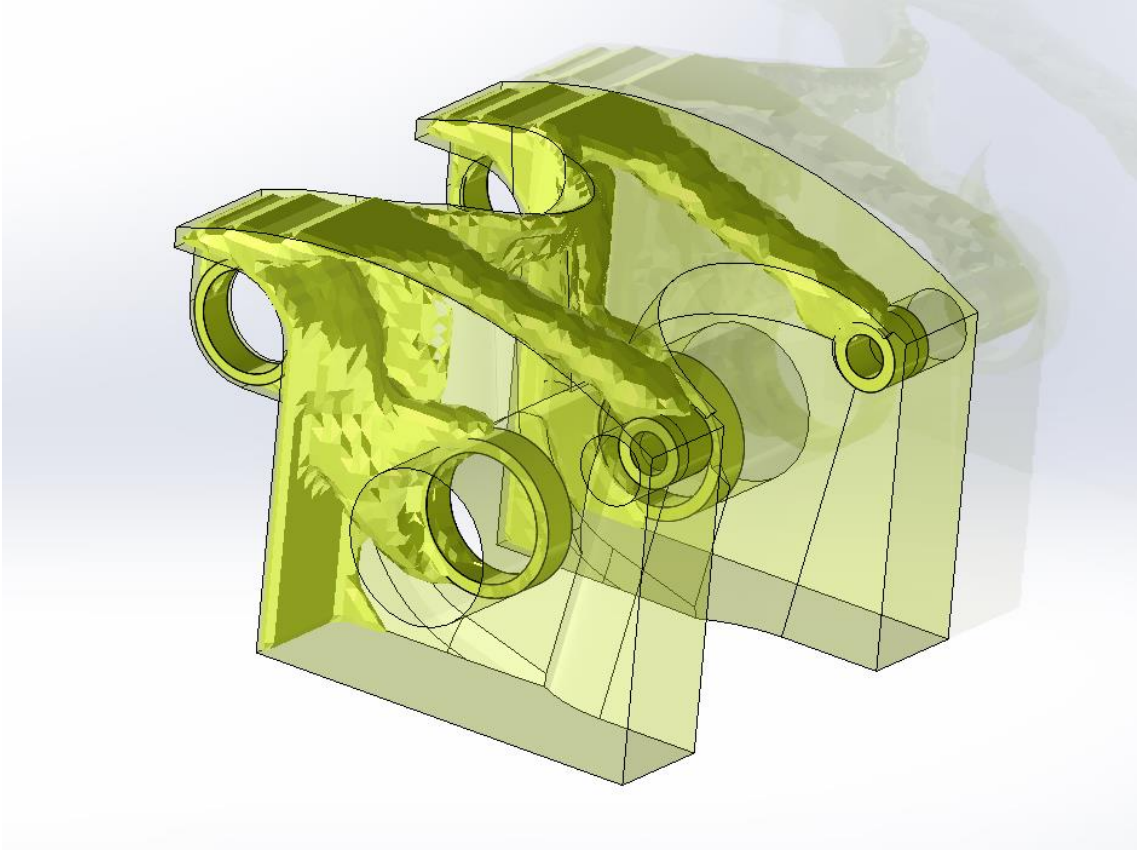

Topology Optimisation and FEA validation

Phase 2 Design Interpretation

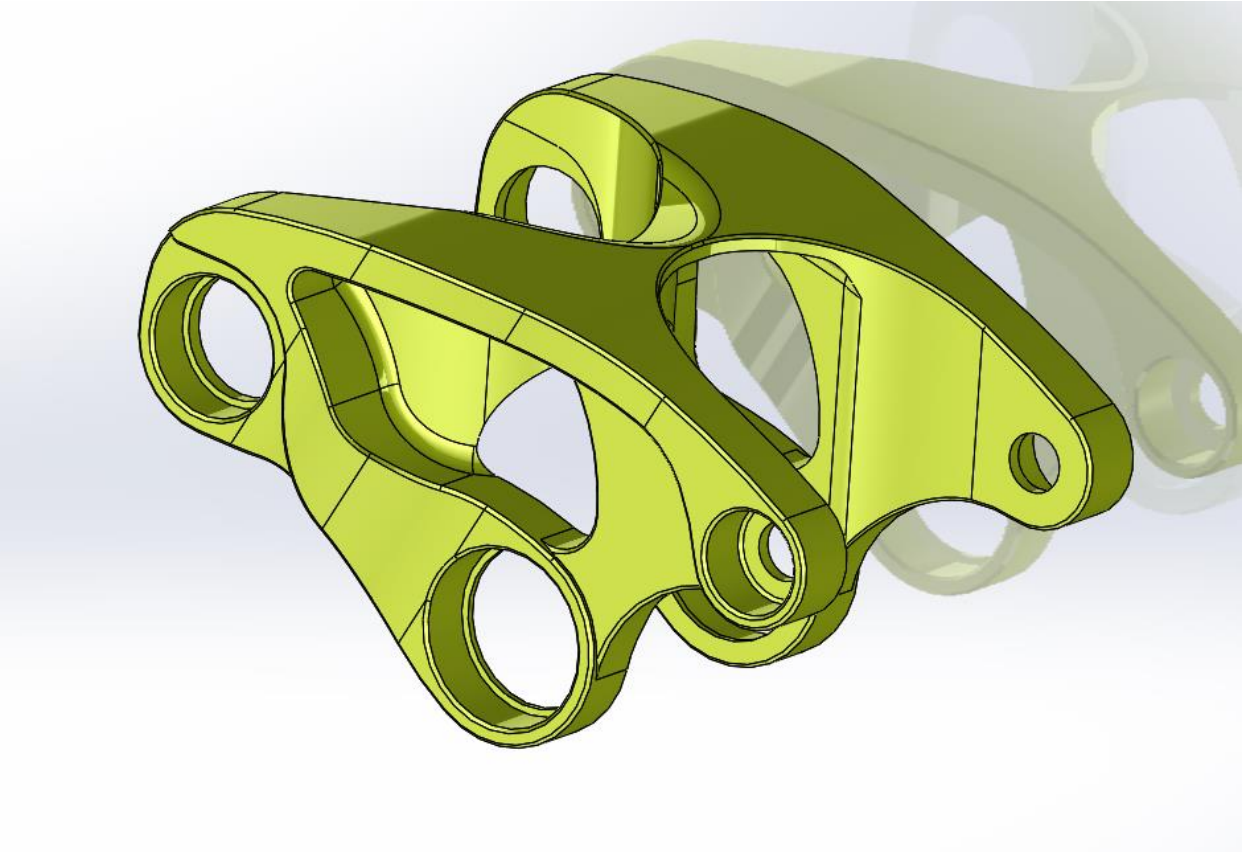

Topology Optimisation and FEA validation

Phase 2 Design for Manufacture

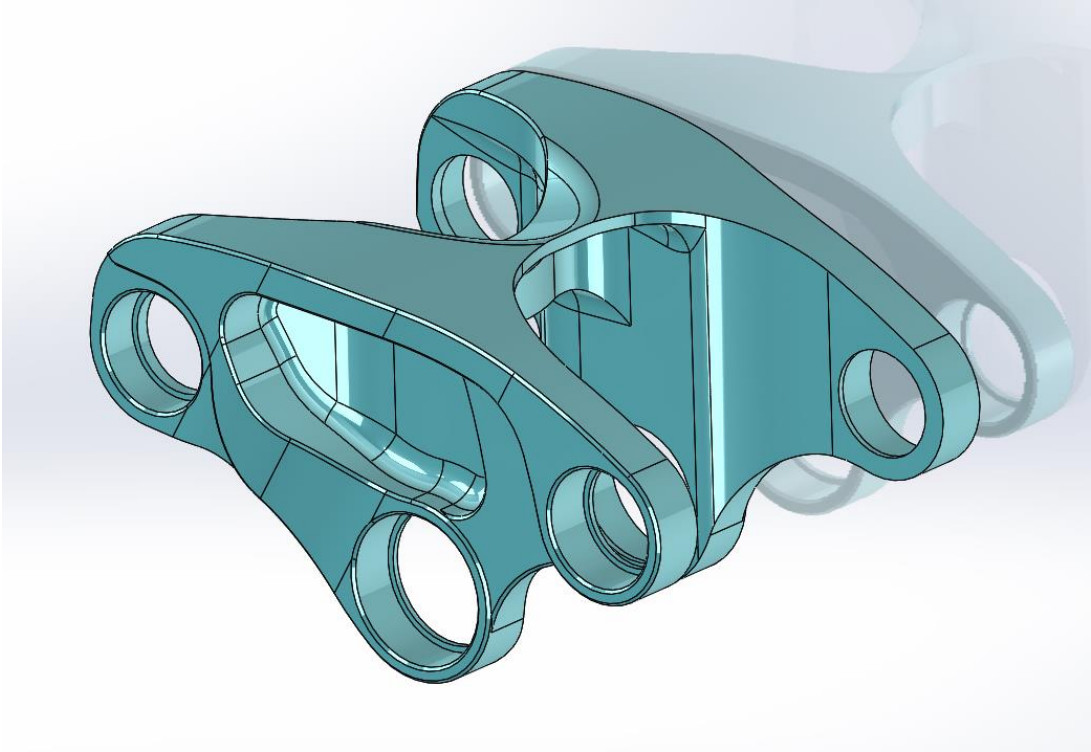

- Manufacturer engaged to discuss design for manufacture requirements
- Features added to avoid issues such as part vibration, surface mismatch, etc

ROBOTBIKECO

GRM OPTIMISED ENGINEERING DESIGN

Topology Optimisation and FEA validation

Final FEA validation

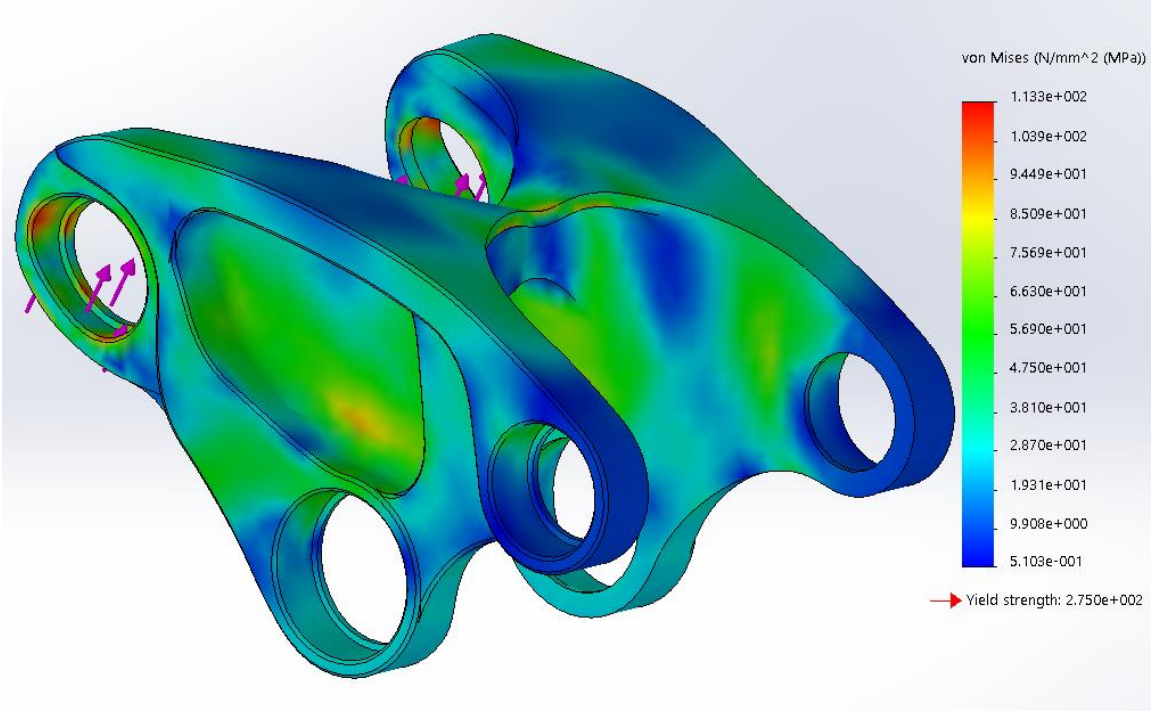

- Peak stress = 1.13 MPa
- FoS = 2.4
- Lateral stiffness matched to existing design
- Weight = 135 grams
- Weight reduction = 30%
- Even stress distribution: efficient use of material

ROBOTBIKECO

GRM OPTIMISED ENGINEERING DESIGN

Topology Optimisation and FEA validation

ROBOTBIKECO

GRM OPTIMISED ENGINEERING DESIGN

Topology Optimisation and FEA validation

Yoke: Additive Manufactured

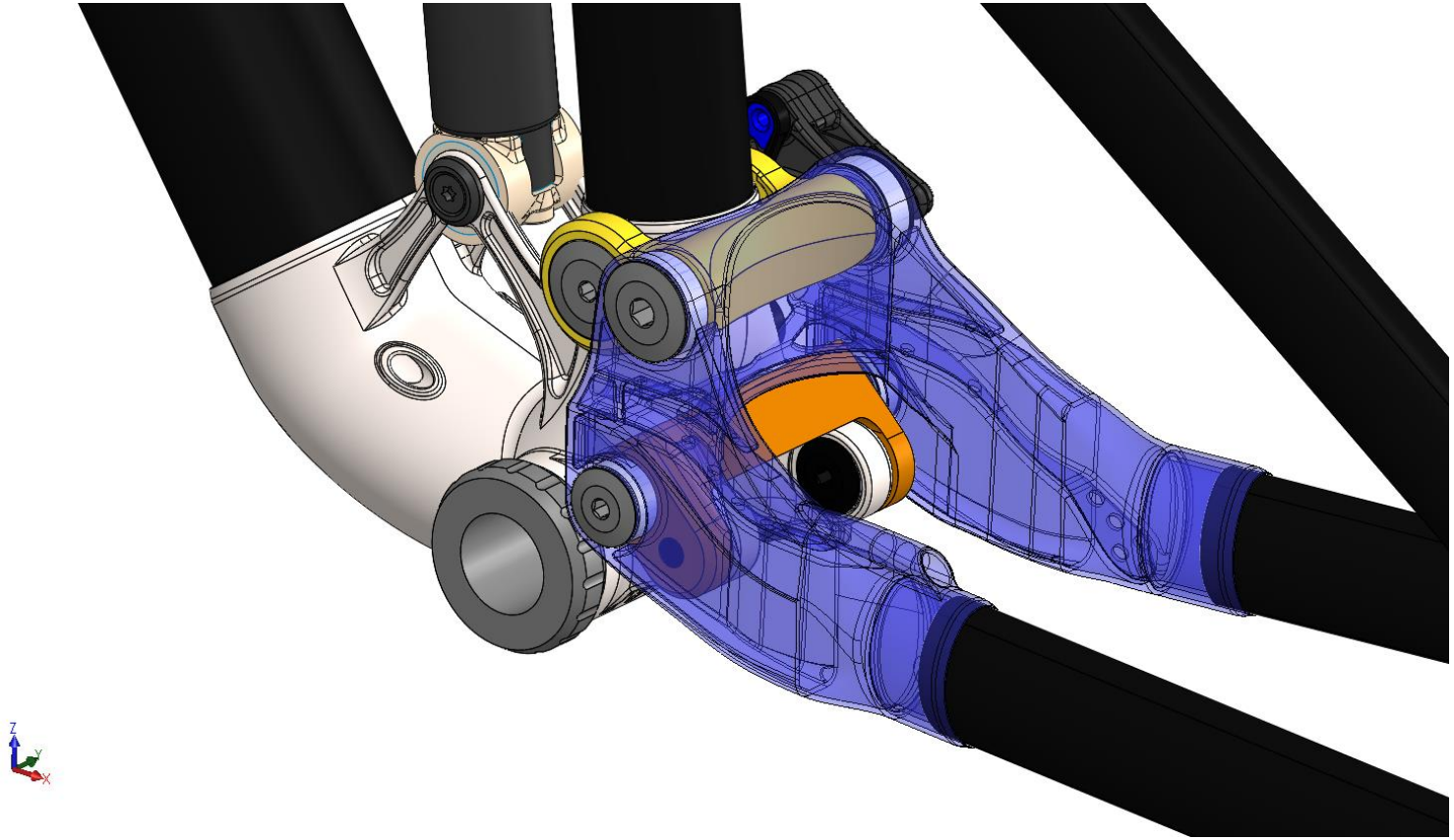

ROBOTBIKECO

GRM OPTIMISED ENGINEERING DESIGN

Topology Optimisation and FEA validation

Yoke: Additive Manufactured

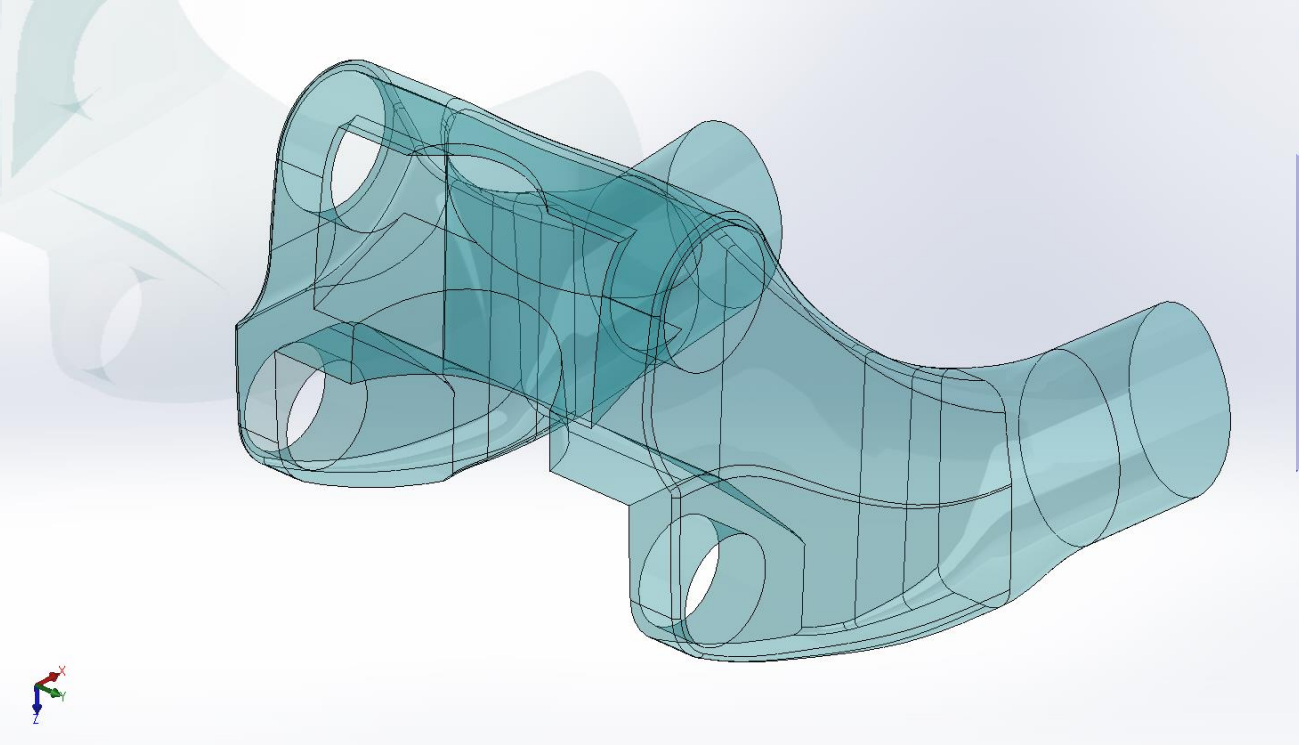

- Outer skin is pre-defined A surface
- Part can not have any open cavities
- Optimisation work is around variable wall thickness and internal rib structures

ROBOTBIKECO

GRM OPTIMISED ENGINEERING DESIGN

Titanium Additive Manufacturing

ROBOTBIKECO

GRM OPTIMISED ENGINEERING DESIGN

Test validation – EN ISO BS 4210-6:2014

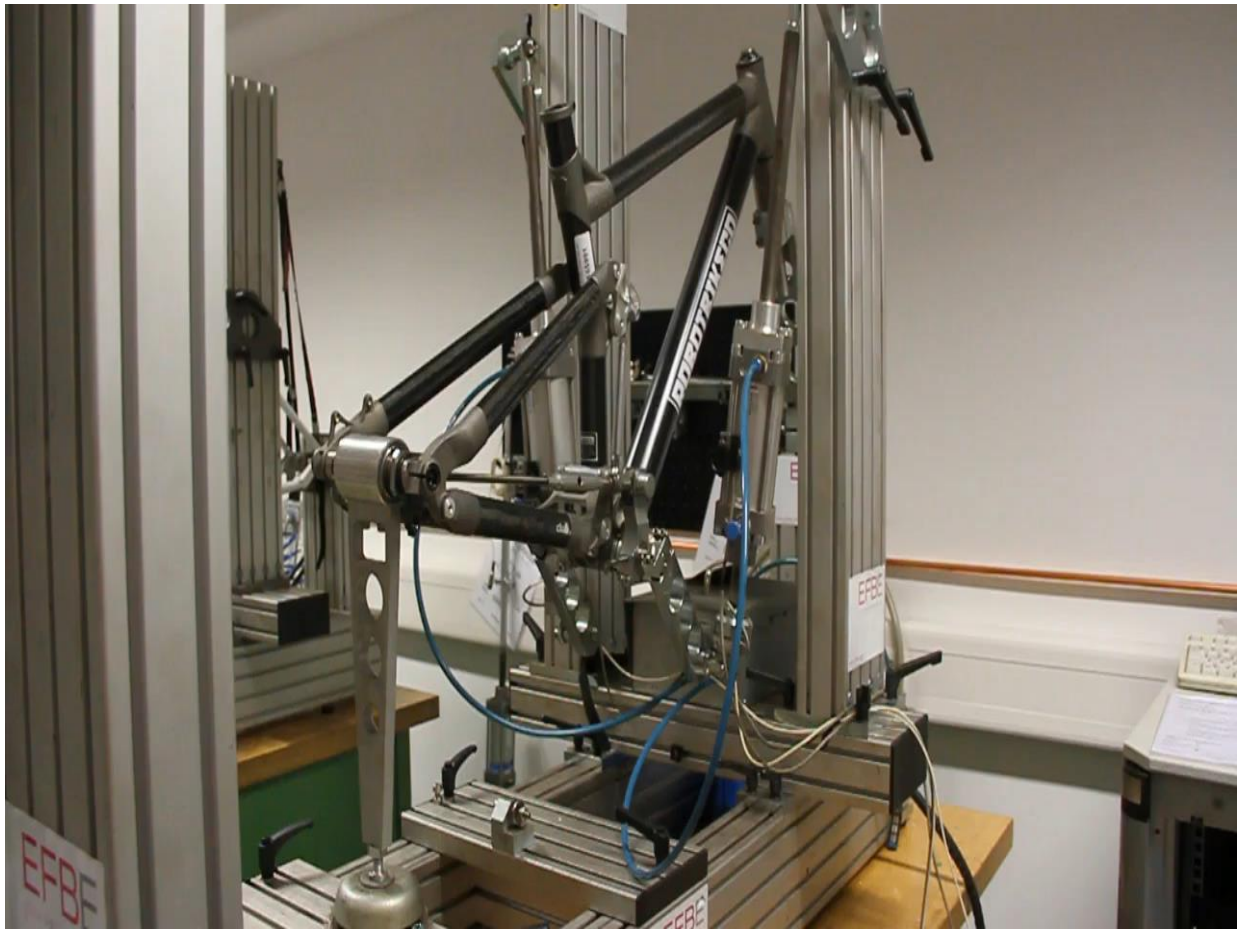

ROBOTBIKECO

GRM OPTIMISED ENGINEERING DESIGN

Test validation – live trail testing

ROBOTBIKECO

GRM OPTIMISED ENGINEERING DESIGN

ROBOTBIKECO

GRM OPTIMISED ENGINEERING DESIGN